10/100/1000 BASE LAN TRANSFORMER

- Compliant with IEEE 802.3 standard.
- RoHS compliant.
- Operating temperature range :0°C to +70°C.
- Storage temperature range:0°C to +85°C.

Electrical Specifications @ 25°C

Part Number	Turns Ratio (±5%)		OCL(µH Min) @100KHz/0.1V With DC8.0mA	Insertion Loss (dB Max)	HI-POT (Vrms)
	TX	RX		0.3-100MHz	
AE-DC72201	1CT:1CT	1CT:1CT	350	-1.1	1500
AE-DC72202	1CT:1CT	1CT:1CT	350	-1.1	1500
AE-DC72203	1CT:1CT	1CT:1CT	350	-1.1	1500
AE-DC72204	1CT:1CT	1CT:1CT	350	-1.1	1500
AE-DC72205	1CT:1CT	1CT:1CT	350	-1.1	1500
AE-DC72206	1CT:1CT	1CT:1CT	350	-1.1	1500

Continue

Part Number	Return Loss (dB Min)			Cross Talk (dB Min)	DCMR (dB Min)		
	0.3-30MHz	40MHz	60-80MHz	0.3-100MHz	30MHz	60MHz	100MHz
AE-DC72201	-18	-14.4	-12	-30	-40	-35	-30
AE-DC72202	-18	-14.4	-12	-30	-40	-35	-30
AE-DC72203	-18	-14.4	-12	-30	-40	-35	-30
AE-DC22204	-18	-14.4	-12	-30	-40	-35	-30
AE-DC72205	-18	-14.4	-12	-30	-40	-35	-30
AE-DC72206	-18	-14.4	-12	-30	-40	-35	-30

Mechanicals:

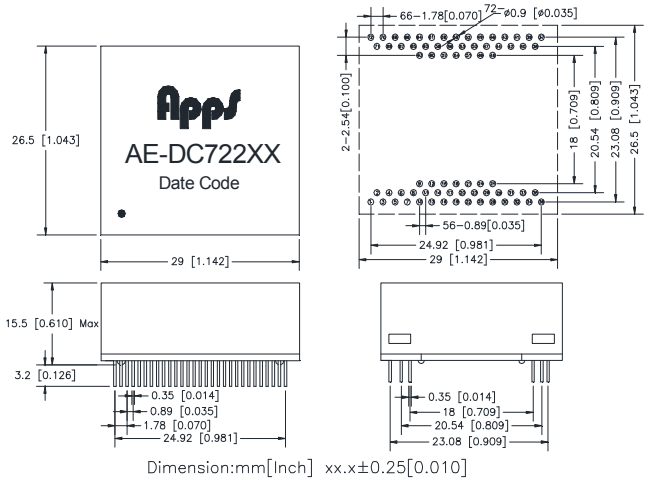

Address:Room 1720, Block A, Xinian Centre, Shennan Road, Futian District, Shenzhen, Guangdong, P.R. China
Tel：+86（755）86538552 Fax：+86（755）26653184 Post Code：518057
Http: www.appselectronics.com E-mail: sales@appselectronics.com

10/100/1000 BASE LAN TRANSFORMER

AE-DC72201

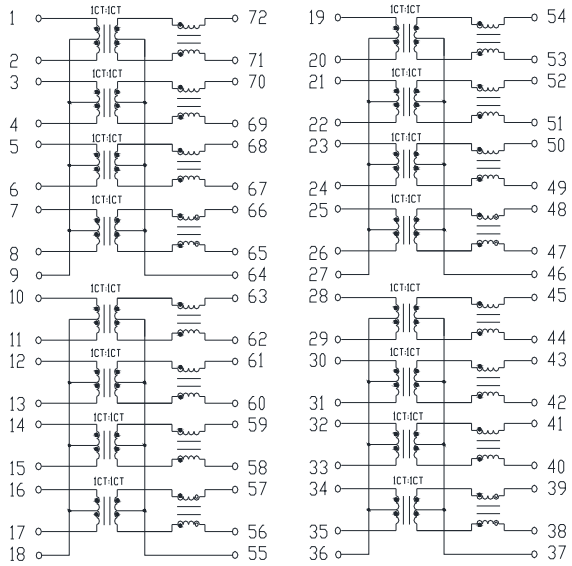

AE-DC72202

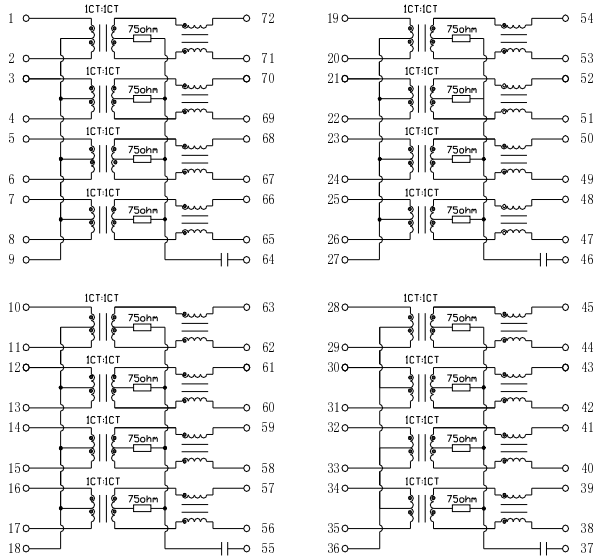

AE-DC72203

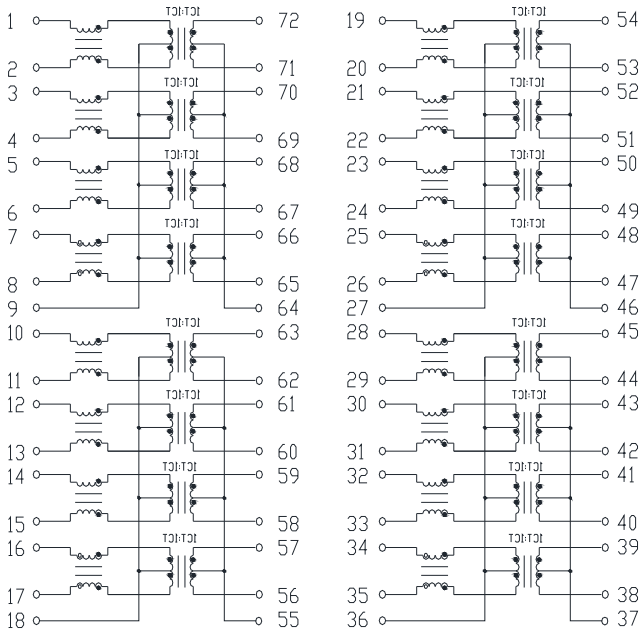

AE-DC72204

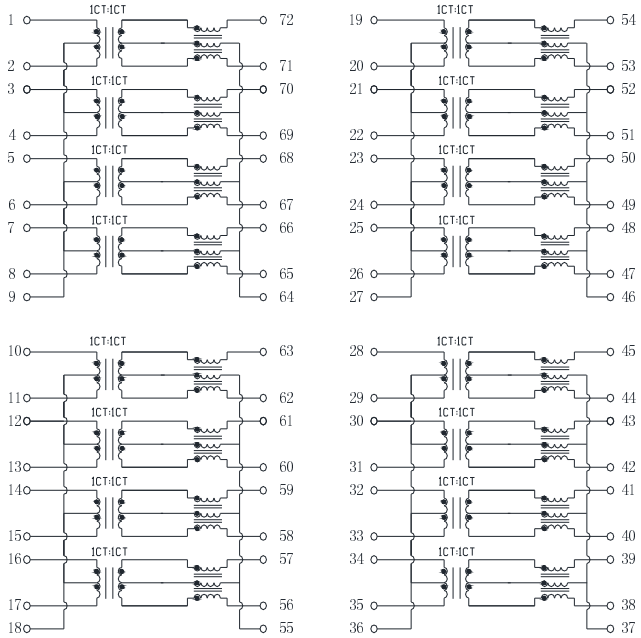

Address:Room 1720, Block A, Xinian Centre, Shennan Road, Futian District, Shenzhen, Guangdong, P.R. China
Tel：+86（755）86538552 Fax：+86（755）26653184 Post Code：518057
Http: www.appselectronics.com E-mail: sales@appselectronics.com

10/100/1000 BASE LAN TRANSFORMER

AE-DC72205

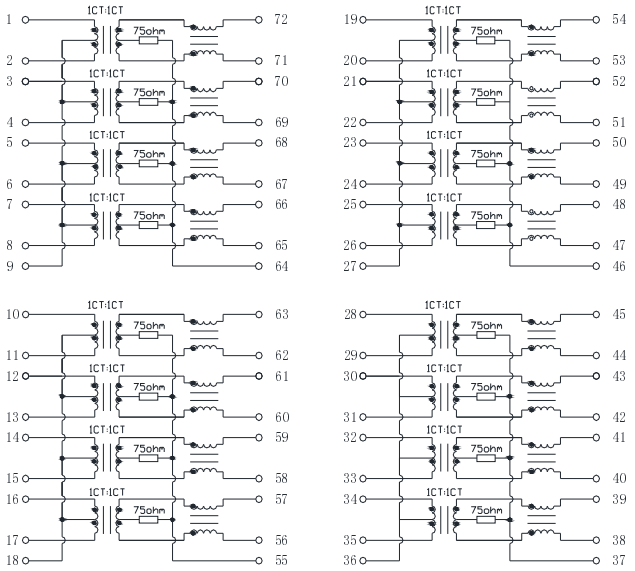

AE-DC72206

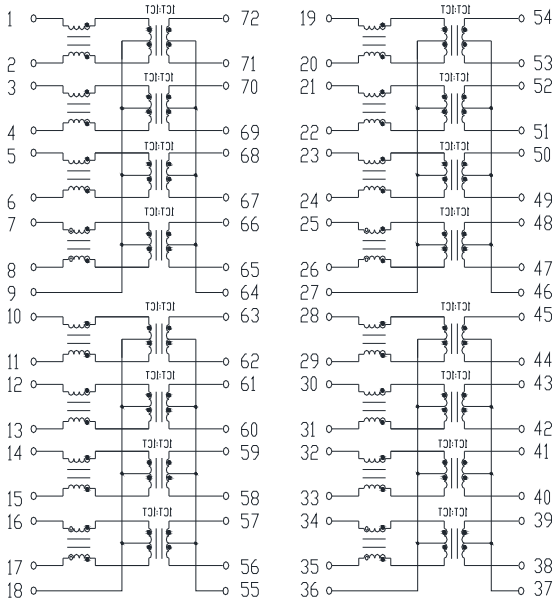

Specification	Packing Manner	Q’ty per Tube/Reel	Q’ty/lnner box	Q’ty/Carton
AE-DC722XX	TUBE	17	/	918

Address:Room 1720, Block A, Xinian Centre, Shennan Road, Futian District, Shenzhen, Guangdong, P.R. China
Tel：+86（755）86538552 Fax：+86（755）26653184 Post Code：518057
Http: www.appselectronics.com E-mail: sales@appselectronics.com